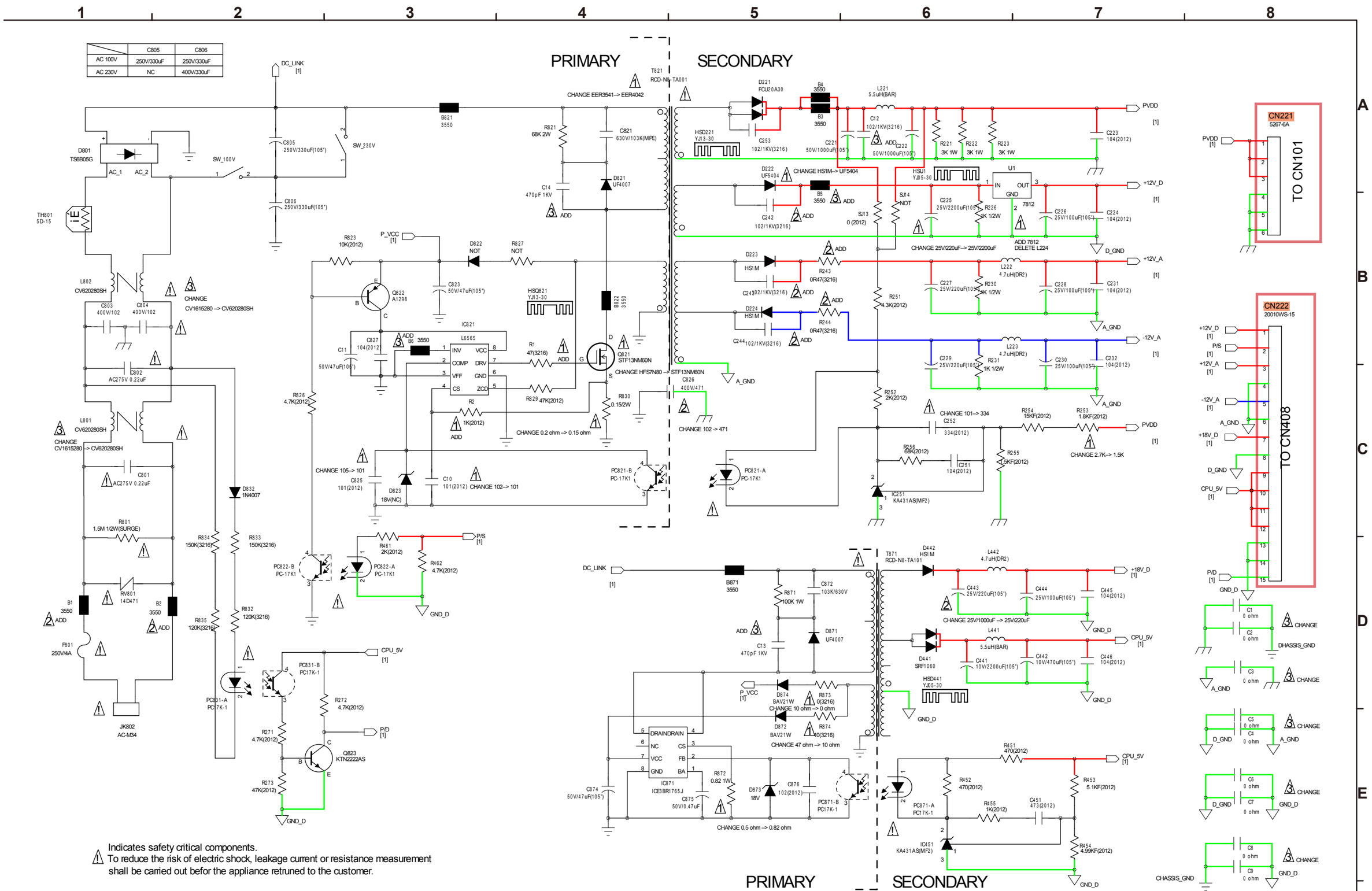

	C805	C806
AC 100V	250V/330uF	250V/330uF
AC 230V	NC	400V/330uF

Indicates safety critical components.
To reduce the risk of electric shock, leakage current or resistance measurement shall be carried out befor the appliance retruned to the customer.

GND — POWER + — POWER - — STBY POWER

SCHEMATIC DIAGRAMS (6/6)
SMPS